Non-derivative Algorithm Design for Efficient Routing over Unreliable Stochastic Networks☆

Bin Li*, Atilla Eryilmaz

Department of Electrical and Computer Engineering, The Ohio State University, Columbus, Ohio 43210, USA.

Abstract

We study the question of routing for minimum average drop rate over unreliable servers that are susceptible to random buffer failures, which arises in unreliable data or manufacturing networks. Interestingly, we first reveal that the traditional Join-the-Shortest-Queue (JSQ) or optimal Randomized Splitting (RS) strategies are consistently outperformed by the Constant Splitting Rule (CSR) where the incoming traffic is split with a constant fraction towards the available servers.

This finding motivates us to obtain the optimal splitting fraction under CSR. However, the objective function to be minimized depends on the mean queue length of the servers, whose closed-form expression is not available and often intractable for general arrival and service processes. Thus, we use non-derivative methods to solve this optimization problem by approximately evaluating the objective value at each iteration. To that end, we explicitly characterize the approximation error by utilizing the regenerating nature of unreliable buffers. By adaptively controlling the precision of this approximation, we show that our proposed algorithm converges to an optimal splitting decision in the almost sure sense. Yet, previous works on non-derivative methods assume continuous differentiability of the objective function, which is not the case in our setup. We relax this strong assumption to the case when the objective function is locally Lipschitz continuous, which is another contribution of this paper.

Keywords: Optimal routing algorithm, unreliable buffers, non-derivative methods, stochastic networks.

1. Introduction

The design and analysis of routing strategies for unreliable networks has received a lot of research interest (e.g.,[1], [2]). In this work, we study the problem of efficient routing for forwarding the arrivals to parallel unreliable queues, where all data in a queue will be dropped when a failure happens. Our goal is to design an efficient routing policy which has a small average drop rate under any arrival rate. One application of this problem in the field of manufacturing systems is the wafer distribution to parallel production pipelines. If the power of one production pipeline stops even for 0.07 seconds,

☆An earlier version of this paper has appeared in the Proceedings of IEEE conference on Decision and Control (CDC), Maui, Hawaii, December, 2012.

☆☆This work is supported by the NSF grants: CAREER-CNS-0953515 and CCF-0916664. Also, the work of A. Eryilmaz was in part supported by the QNRF grant number NPRP 09-1168-2-455.

*Corresponding author

Email address: celibin@gmail.com (Bin Li)

URL: http://www2.ece.ohio-state.edu/~lib (Bin Li), http://www2.ece.ohio-state.edu/~eryilmaz (Atilla Eryilmaz)

all wafers in that pipeline break down. Similarly, in data networks serving delay-sensitive traffic, any unexpected setback in the service causes the dropping of all awaiting packets. In both scenarios, we need to make intelligent routing decisions to distribute the incoming traffic to unreliable servers, which is the focus of this work.

Join the Shortest Queue (JSQ) policy (e.g., [3], [5]), where all arrivals are forwarded to the shortest queue at each slot, has been widely used as a basic routing mechanism in wired or wireless communication networks. When all queues are reliable (e.g., no failure happens), the JSQ policy is shown to have minimum delay in the symmetric case [4], or under heavy-traffic (e.g., [5], [6]), and exhibits good performance in the general cases. However, when there are some unreliable queues, the JSQ policy may perform poorly. To see this, consider a system consisting of one reliable queue and one totally unreliable queue (e.g., failure happens all the time), all arrivals are routed to the unreliable queue under the JSQ policy and thus the average drop rate is 100%. In [2], the authors studied the Randomized Splitting (RS) policy that forwards all arrivals to a queue with a certain probability in the similar scenario. They obtained the optimal RS for the Poisson arrivals and exponential services. Yet, to the best of our knowledge, there does not exist a work that systematically treats this problem under general arrival and service processes and proposes an efficient routing policy.

In this work, we propose a constant splitting rule (CSR) that forwards a constant fraction of incoming traffic to each of the available (unreliable) servers. We show that the optimal CSR minimizes the average drop rate among all routing policies when both arrivals and services are deterministic. For the general arrival and service processes, the optimal CSR outperforms, based on numerical investigations, the well-known policies, e.g., JSQ and RS. To obtain the optimal splitting fraction, we need to solve the optimization problem with the objective function depending on the mean queue length. Since the formula for the mean queue length is hard to obtain under general arrival and service processes, it is difficult to get the exact expression for the objective function, let alone its derivative. Hence, it is almost impossible to use first or higher order numerical optimization methods to solve this optimization problem and thus we use non-derivative methods to get the optimal splitting fraction.

The most popular non-derivative method includes Patterned Search (PS) algorithms (e.g.,[7], [8], [9]), which construct the set of points based on the step size varying according to a certain rule: when no improvement point is obtained on this set in the current iteration, then the step size reduces and the process is repeated. However, all these works require the exact functional value for the given point, which can not be achieved in practice. In [10], the authors presented a modified PS algorithm which adaptively adjusts the precision of the functional evaluations for the deterministic system where the accuracy of the functional value improves by increasing the evaluation time.

In our setup, the functional evaluation includes estimating the mean queue length, which can be approximated by the time average queue length. However, the approximate error is in the probabilistic form and thus it is unclear how to control the precision to guarantee the convergence to the stationary point almost surely. The earlier works (e.g.,[11], [12]) attacked this problem when the objective function is continuously differentiable, which is not the case in our setup. We generalized the previous results to the case when the objective function is locally Lipschitz continuous. The following items list our main contributions along with references on where they appear in the text:

• In Section 3, we reveal the advantage of optimal CSR over JSQ or RS in the presence of buffer breakdowns, both by showing its optimality under deterministic processes and also by providing numerical results under general processes. This motivates us to obtain the optimal constant splitting fraction for the general stochastic system by using the aforementioned PS algorithm.

• In Section 4, we first characterize the probabilistic error between the approximate value and the true objective value. Then, we present the PS algorithm that adaptively adjusts the probabilistic error

in each iteration, which is shown to guarantee the convergence to the optimal point almost surely.

2. System Model and Problem Statement

We consider the classic system consisting of a router and L servers with associated unreliable queues (see Figure 1). At each time slot, the router needs to determine how to forward the arrivals.

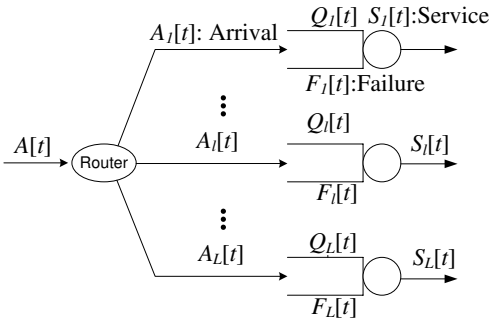

Figure 1: System model for routing over unreliable queues

We assume that all data in the queue will be dropped if a failure happens. Let $F_l[t]$ denote whether a failure happens at queue l at slot t, where $F_l[t] = 1$ if a failure happens and $F_l[t] = 0$ otherwise. We assume that $F_l[t], \forall l, t$, are independently distributed over queues and identically distributed over time, with $p_l := \Pr\{F_l[t] = 1\} > 0, \forall l$. Let $Q_l[t]$ be the queue length of queue l at the beginning of slot t. Let $A[t]$ denote the amount of data arriving at router in slot t with $\mathbb{E}[A[t]] = \lambda$, and $\mathbb{E}[A^2[t]] \leq \nu$ for some $\nu < \infty$. We assume that $A[t], \forall t$, are identically distributed over time. Let $S_l[t]$ denote the maximum amount of data that can be served by server l at slot t with $\mathbb{E}[S_l[t]] = \mu_l$ and $\mathbb{E}[S_l^2[t]] \leq \kappa_l$ for some $\kappa_l < \infty$. We assume that $S_l[t], \forall l, t$, are independently distributed over queues and identically distributed over time. If the router forwards $A_l[t]$ amount of data to queue l at slot t, then the evolution of queue l is shown as follows [1]:

$$Q_l[t+1] = ((Q_l[t] + A_l[t])(1 - F_l[t]) - S_l[t])^+, \forall l, \tag{1}$$

where $(x)^+ := \max\{x, 0\}$. Our goal is to find the routing policy $\{(A_l[t])_{l=1}^L\}_{t\geq 0}$ that minimizes the average drop rate. At each slot t, the amount of dropped data at queue l is equal to $(Q_l[t] + A_l[t])F_l[t]$ and thus its expected value is $p_l\mathbb{E}[Q_l[t] + A_l[t]]$. Hence, our goal is to solve the following optimization problem:

Definition 1. ***(Stochastic Control Problem)***

$$\underset{\{(A_l[t])_{l=1}^L\}_{t\geq 0}}{\text{Minimize}} \quad \limsup_{T\to\infty} \frac{1}{T} \sum_{t=0}^{T-1} \sum_{l=1}^{L} p_l \mathbb{E}\left[Q_l[t] + A_l[t]\right] \tag{2}$$

$$\textit{Subject to} \quad \sum_{l=1}^{L} A_l[t] = A[t], \forall t. \tag{3}$$

[1] This particular evolution assumes arrivals into queues before failures. Other variations would not change the essential features of the subsequent discussion.

It is very tough to solve the above stochastic control problem directly. Instead, we consider the following efficient routing policy, which we show to be efficient in our subsequent investigations.

Definition 2. ***(Constant Splitting Rule (CSR))*** *In each time slot, forward a_l fraction of incoming data to queue $l, \forall l = 1, ..., L-1$ and the remaining $a_L := 1 - \sum_{l=1}^{L-1} a_l$ fraction of data to queue L, where $a_l, \forall l = 1, ..., L-1$, are non-negative and satisfy $\sum_{l=1}^{L-1} a_l \leq 1$.*

In Section 3, we will show that the optimal CSR is an optimal routing policy to the above stochastic control problem for the system with symmetric failure probabilities under constant arrivals and constant services. Moreover, through simulations, we can observe that the optimal CSR outperforms the well-known routing policies. Thus, our main task is to obtain the optimal CSR policy in the rest of the paper.

Since the mean queue length is a convex function of the arrival rate for a single queue (by Proposition 4 in Section 4) and the mean arrival rate for queue l is $a_l\lambda$, let $f_l(a_l\lambda)$ be the mean queue length for queue l. Let $\mathbf{a} \triangleq (a_l)_{l=1}^{L-1}$. To get the optimal CSR, we need to solve the following optimization problem:

$$\underset{\mathbf{a}}{\text{Minimize}} \quad g(\mathbf{a}) := \sum_{l=1}^{L} p_l f_l(a_l\lambda) + \sum_{l=1}^{L} p_l a_l \lambda \tag{4}$$

$$\text{subject to} \quad \sum_{l=1}^{L-1} a_l \leq 1 \tag{5}$$

$$a_l \geq 0, \forall l = 1, 2, ..., L-1. \tag{6}$$

It is difficult to get the exact expression for $g(\mathbf{a})$ under the general arrival and service processes, let alone to obtain its derivative. Thus, it is almost impossible to use first or higher order numerical optimization methods to solve this optimization problem. Hence, the only option for us is to use non-derivative methods, which only evaluates the functional value at each iteration. However, it is worth emphasizing that it is also hard to get the exact mean queue length for general arrival and service processes. Thus, we use the time average queue length to approximate the mean queue length with the error characterized in the probabilistic form. By controlling the probabilistic error in each iteration, the proposed algorithm can guarantee almost sure convergence to the optimal point. Appendix A explores some basic properties for a single unreliable queue. Next, we will show the optimality of CSR in the deterministic system with symmetric non-zero failure probabilities and point out its robustness in the general stochastic system.

3. CSR Performance Analysis and Comparison

In this section, we first show that the optimal CSR minimizes the average drop rate among all routing policies for the system with symmetric failure probabilities under constant arrivals and services. Moreover, for general arrival and service processes, we numerically observe that the optimal CSR outperforms the well-known routing policies, i.e., JSQ and optimal RS. These observations signify the value of using CSR over more adaptive strategies for efficient routing over unreliable networks.

We first introduce the following lemma, which is crucial in establishing the optimality of CSR in deterministic systems.

Lemma 1. *For a single queue with constant arrival λ and constant service μ under the non-zero failure probability $p \in (0, 1)$, the mean queue length is $\frac{1-p}{p}(\lambda - \mu)^+$.*

Proof. The proof is based on the observation that this system can be regarded as a renewal reward process (see Appendix A). Detailed proof is provided in Appendix B. □

Proposition 1. *For the system consisting of L unreliable queues with the constant service μ_l and same non-zero failure probability p under the constant arrival λ, the optimal CSR minimizes the average drop rate among all routing policies.*

Proof. Under the above setup, our goal (4) is equivalent to minimizing

$$\limsup_{T\to\infty} \frac{1}{T} \sum_{t=1}^{T} \sum_{l=1}^{L} \mathbb{E}[Q_l[t]]. \tag{7}$$

We prove this proposition by first establishing the fact that under any routing policy, the term (7) in the original system is lower bounded by that in a single queue with the failure probability p under the constant arrival λ and constant service $\sum_{l=1}^{L} \mu_l$. Then, we show that the optimal CSR can achieve this lower bound and thus is optimal among all routing policies.

Let $Q_e[t]$ be the queue length in the introduced single queue at time t. By Lemma 3 in Appendix A, there exists a random variable $\overline{Q}_e$ with $\mathbb{E}[\overline{Q}_e] < \infty$ such that $\lim_{t\to\infty} \mathbb{E}[Q_e[t]] = \mathbb{E}[\overline{Q}_e]$. Hence, by Cesaro's lemma, we have $\lim_{T\to\infty} \frac{1}{T} \sum_{t=0}^{T-1} \mathbb{E}[Q_e[t]] = \mathbb{E}[\overline{Q}_e]$.

(1) If $\lambda \le \sum_{l=1}^{L} \mu_l$, then by Lemma 1, we have $\mathbb{E}[\overline{Q}_e] = 0$. Thus, it is obvious that

$$\limsup_{T\to\infty} \frac{1}{T} \sum_{t=0}^{T-1} \sum_{l=1}^{L} \mathbb{E}[Q_l[t]] \ge \limsup_{T\to\infty} \frac{1}{T} \sum_{t=0}^{T-1} \mathbb{E}[Q_e[t]]. \tag{8}$$

(2) If $\lambda > \sum_{l=1}^{L} \mu_l$, by taking the expectation on both sides of (1), we have

$$\mathbb{E}[Q_l[t+1]] = (1-p)\mathbb{E}[(Q_l[t] + A_l[t] - \mu_l)^+], \forall l.$$

Then, we have

$$\sum_{l=1}^{L} \mathbb{E}\left[Q_l[t+1]\right] = (1-p) \sum_{l=1}^{L} \mathbb{E}[(Q_l[t] + A_l[t] - \mu_l)^+] \ge (1-p) \left(\sum_{l=1}^{L} \mathbb{E}[Q_l[t]] + \lambda - \sum_{l=1}^{L} \mu_l \right). \tag{9}$$

On the other hand,

$$\mathbb{E}[Q_e[t+1]] = (1-p) \left(\mathbb{E}[Q_e[t]] + \lambda - \sum_{l=1}^{L} \mu_l \right). \tag{10}$$

Thus, if $\sum_{l=1}^{L} Q_l[0] = Q_e[0]$, then by combining (9) and (10), we have $\sum_{l=1}^{L} \mathbb{E}[Q_l[1]] \ge \mathbb{E}[Q_e[1]]$. If $\sum_{l=1}^{L} \mathbb{E}[Q_l[t]] \ge \mathbb{E}[Q_e[t]]$, then we have

$$\begin{aligned} \sum_{l=1}^{L} \mathbb{E}\left[Q_l[t+1]\right] &\ge (1-p) \left(\sum_{l=1}^{L} \mathbb{E}[Q_l[t]] + \lambda - \sum_{l=1}^{L} \mu_l \right) \text{(by equation (9))} \\ &\ge (1-p) \left(\mathbb{E}[Q_e[t]] + \lambda - \sum_{l=1}^{L} \mu_l \right) = \mathbb{E}[Q_e[t+1]]. \end{aligned}$$

Thus, by induction, we have $\sum_{l=1}^{L}\mathbb{E}[Q_l[t]] \geq \mathbb{E}[Q_e[t]], \forall t$, and thus (8) still holds. By Lemma 1, we have $\mathbb{E}[\overline{Q}_e] = \frac{1-p}{p}\left(\lambda - \sum_{l=1}^{L}\mu_l\right)^+$. Thus, we have

$$\limsup_{T\to\infty}\frac{1}{T}\sum_{t=0}^{T}\sum_{l=1}^{L}\mathbb{E}\left[Q_l[t]\right] \geq \frac{1-p}{p}\left(\lambda - \sum_{l=1}^{L}\mu_l\right)^+. \tag{11}$$

This shows that the introduced single queue system is in fact a lower bound to the original system in terms of (7).

Next, we will show that the optimal CSR can achieve this lower bound. Since for CSR policy, the router forwards a_l fraction of arrivals to queue l at each slot, by Lemma 3 in Appendix A, there exists a random variable $\overline{Q}_l$ with $\mathbb{E}[\overline{Q}_l] < \infty$ such that $\lim_{t\to\infty}\mathbb{E}[Q_l[t]] = \mathbb{E}[\overline{Q}_l]$. Hence, by Cesaro's lemma, we have $\lim_{T\to\infty}\frac{1}{T}\sum_{t=0}^{T-1}\mathbb{E}[Q_l[t]] = \mathbb{E}[\overline{Q}_l]$. By Lemma 1, we have $\mathbb{E}[\overline{Q}_l] = \frac{1-p}{p}(a_l\lambda - \mu_l)^+$. Thus, the optimization problem (7) becomes

$$\underset{(a_l)_{l=1}^{L}}{\text{Minimize}} \quad \frac{1-p}{p}\sum_{l=1}^{L}(a_l\lambda - \mu_l)^+ \tag{12}$$

$$\text{Subject to} \quad \sum_{l=1}^{L} a_l = 1 \tag{13}$$

$$a_l \geq 0, \forall l = 1, ..., L. \tag{14}$$

It is easy to see that if $\lambda \leq \sum_{l=1}^{L}\mu_l$, then $a_l^* = \frac{\mu_l}{\sum_{l=1}^{L}\mu_l}, \forall l$. In this case, the optimal value is 0. If $\lambda > \sum_{l=1}^{L}\mu_l$, then

$$a_l^* = \frac{\mu_l}{\lambda}, \forall l = 1, ..., L-1, a_L^* = \frac{\lambda - \sum_{l=1}^{L-1}\mu_l}{\lambda}. \tag{15}$$

In this case, the optimal value is $\frac{1-p}{p}\left(\lambda - \sum_{l=1}^{L}\mu_l\right)$, which is exactly the lower bound in (11). Thus, the optimal CSR is indeed optimal among all routing policies. □

For general arrival and service processes, the mean queue length for a single queue does not have a closed-form expression, and so does the objective function in (4). Hence, it is difficult to analyze the performance of optimal CSR policy. Instead, we will show through extensive simulations that for general arrival and service processes, the optimal CSR also outperforms the well-known routing policies, e.g., JSQ (cf. Definition 3) and optimal RS (cf. Definition 4).

Definition 3. ***(Join-the-Shortest-Queue (JSQ))*** *In each time slot, forward all incoming data to the one of queues with the shortest queue length in that time-slot, breaking ties uniformly at random.*

Definition 4. ***(Randomized Splitting (RS))*** *In each time slot, forward all incoming data to queue l with probability $b_l, \forall l = 1, ..., L$, where $b_l, \forall l = 1, ..., L$, are non-negative and satisfy $\sum_{l=1}^{L} b_l = 1$.*

In the simulation, there are $L = 2$ unreliable queues. The amount of arrivals and services in each slot follows Poisson and exponential distribution in Fig. 2 and 3, respectively. We use brute-force search method to get the optimal RS and optimal constant splitting fraction. We compare the average

drop rate among optimal CSR, optimal RS and JSQ under both symmetric and asymmetric cases. From Fig. 2a, 2b, 3a and 3b, we can observe that JSQ exhibits good performance when the failure probability is small and the optimal CSR is quite robust for both low and high failure probability. From Fig. 2c, 2d, 3c and 3d, we can see that JSQ performs better than the optimal RS in the high arrival rate and shows worse performance in the low arrival rate, while the optimal CSR has the best performance in all cases. Thus, the optimal CSR is quite robust when the highly unreliable queues exist. However, it is hard to solve the optimization problem (4) without the exact expression for the objective function by the first or higher order numerical optimization methods. Instead, we introduce the non-derivative method in the next section.

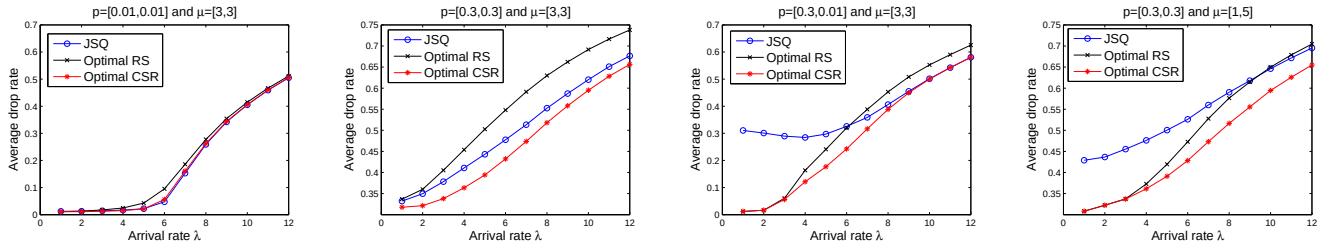

(a) (b) (c) (d)

Figure 2: Average drop rate under Poisson distribution: (a) Symmetric case: small failure probability; (b) Symmetric case: large failure probability; (c) Asymmetric case: same service rate; (d) Asymmetric case: same failure probability.

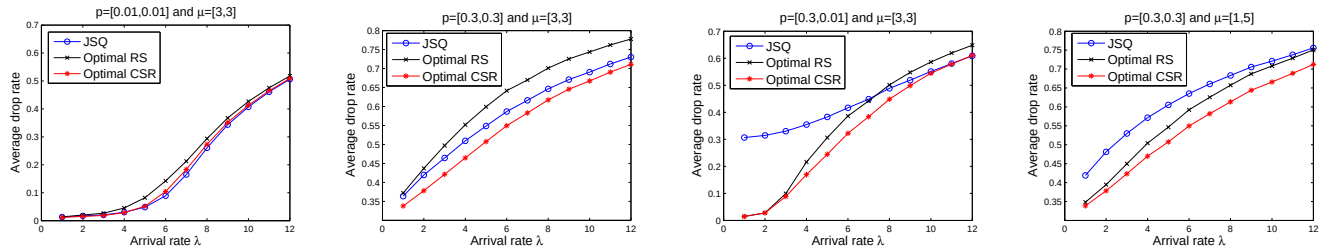

(a) (b) (c) (d)

Figure 3: Average drop rate under exponential distribution: (a) Symmetric case: small failure probability; (b) Symmetric case: large failure probability; (c) Asymmetric case: same service rate; (d) Asymmetric case: same failure probability.

4. Non-derivative method for the optimal CSR

In Section 3, we observed the advantage of using optimal CSR over JSQ or optimal RS. In this section, we turn to the question of finding the optimal splitting fraction that solves the problem (4). This calls for the use of non-derivative methods since the objective function is not known in closed form, and can only be evaluated approximately. To that end, in Section 4.1, we estimate the error between the approximate objective function $g(\mathbf{a})$ in (4) and its true value at the given splitting fraction $\mathbf{a}$ in the probabilistic form. Then, in Section 4.2, we use non-derivative methods to solve the optimization problem (4) and show its almost sure convergence to an optimal point.

4.1. Approximation Error

To use the non-derivative method, we need to know the functional value at each point. However, for a general stochastic system, it is almost impossible to get the exact value of $g(\mathbf{a})$ for each splitting $\mathbf{a}$ due to its dependence on the mean queue length of each queue. In this subsection, we obtain the approximation of $g(\mathbf{a})$ by using the time average queue length to estimate the mean queue length. To analyze the performance of the non-derivative method, we need to get the estimation error for each approximation. To that end, we first give the convergence rate of time average queue length to the mean queue length for a single queue (see Proposition 2). Then, we estimate the error between the approximation of $g(\mathbf{a})$ and its true value in the probabilistic form (see Proposition 3).

For a single unreliable queue, let N be the number of failures happening since $t = 0$ and Y_N be the time at which N^{th} failure happens for a single unreliable queue. The following proposition characterizes the rate at which the time average queue length converges to the mean queue length.

Proposition 2. *For a single unreliable queue with non-zero failure probability p, where both arrivals $A[t]$ and services $S[t]$ are identically and independently distributed over time, and $\mathbb{E}[A[t]] = \lambda$ and $\mathbb{E}[A^2[t]] = \nu < \infty$, we have*

$$\Pr\left\{\left|\frac{1}{Y_N}\sum_{t=1}^{Y_N} Q[t] - \mathbb{E}[\overline{Q}]\right| > \epsilon\right\} \leq h_N(\epsilon|\lambda,\nu,p), \tag{16}$$

where $\overline{Q}$ is a steady-state queue-length random variable,

$$h_N(\epsilon|\lambda,\nu,p) := h_{1,N}\left(\frac{\sqrt{\epsilon}}{2}\middle|p\right) + h_{1,N}\left(\frac{\epsilon p^2}{2\lambda(1-p)}\middle|p\right) + h_{2,N}\left(\frac{\epsilon}{4p}\middle|\lambda,\nu,p\right) + h_{2,N}\left(\frac{\sqrt{\epsilon}}{2}\middle|\lambda,\nu,p\right), \tag{17}$$

$$h_{1,N}(\epsilon|p) := \begin{cases} \frac{(1-p)(p+\epsilon)^2}{N\epsilon^2}, \text{ if } \epsilon \geq p \\ \frac{(1-p)(p+\epsilon)^2}{N\epsilon^2} + \frac{(1-p)(p-\epsilon)^2}{N\epsilon^2}, \text{ if } \epsilon < p \end{cases},$$

and

$$h_{2,N}(\epsilon|\lambda,\nu,p) := \frac{(\nu-2\lambda^2)p^3 + (10\lambda^2-3\nu)p^2 + (2\nu-14\lambda^2)p + 6\lambda^2}{N\epsilon^2 p^4}.$$

Proof. See Appendix C for details. □

Remarks: (1) In a given stochastic system, for any given $\epsilon > 0$, we have $\lim_{N\to\infty} h_N(\epsilon|\lambda,\nu,p) = 0$. Thus, we can use the time average queue length to approximate the mean queue length at arbitrary accuracy by observing sufficiently many failures N.

(2) We note that, if all moments of $A[t]$ are bounded, the convergence rate of time average queue length to the mean queue length is exponentially fast, but is hard to characterized due to the complexity of queue length evolution. Nevertheless, (16) is enough for us, since we focus on the convergence of the proposed algorithm rather than its convergence rate.

(3) For pure optimization problems without complicated queue evolution, it is easy to get the exact exponential decay rate for the probability that the time average functional value deviates its mean value. For example, consider the optimization problem (see [12])

$$\min_{\mathbf{x}\in\mathcal{X}} \quad W(\mathbf{x}) := \mathbb{E}[w(\mathbf{x},\boldsymbol{\xi})], \tag{18}$$

where w is a function of $\mathbf{x}$ and $\boldsymbol{\xi}$, $\boldsymbol{\xi}$ is a q-dimensional random vector with the bounded moment generation function, and $\mathcal{X} \subset \mathbb{R}^p$. Assume that $W(\mathbf{x})$ does not have a closed-form expression and thus we can only use non-derivative methods to solve this optimization problem. We generate M identical and independent random samples $\boldsymbol{\xi}_1$, $\boldsymbol{\xi}_2$, ..., $\boldsymbol{\xi}_M$. Then, we can approximate the functional value at $\mathbf{x}$ by using the sample mean $\frac{1}{M}\sum_{i=1}^{M} w(\mathbf{x}, \boldsymbol{\xi}_i)$. The approximation error can be characterized as follows:

$$\Pr\left\{\left|\frac{1}{M}\sum_{i=1}^{M} w(\mathbf{x}, \boldsymbol{\xi}_i) - W(\mathbf{x})\right| > \epsilon\right\} \leq e^{-MI_w(\epsilon)}, \tag{19}$$

where $I_w(\cdot)$ is the rate function (see [13]) corresponding to the random variable $w(\mathbf{x}, \boldsymbol{\xi})$. In [11][12], the authors proposed non-derivative methods for this pure optimization problem assuming the continuous differentiability of the objective function $W(\mathbf{x})$. However, this assumption in general is not expected to hold in our setup. Indeed, from Lemma 1, the mean queue length is not a continuously differentiable function of the arrival rate at the service rate point μ and thus our objective function (4) is not continuously differentiable. Under general arrival and service processes, the objective function does not have a closed-form expression and so there is no ground to assume their continuous differentiability. In Section 4.2, we are forced to relax this strong assumption to the case when the objective function is locally Lipschitz continuous, which holds much more generally.

Next, we give the approximation of $g(\mathbf{a})$ and obtain its error in the probabilistic form. Let N_l be the number of failures occurring in queue l. Let $\mathbf{N} := (N_l)_{l=1}^{L}$. The next proposition gives the approximation of $g(\mathbf{a})$ with the error in the probabilistic form.

Proposition 3. *For a system with L unreliable queues, we have*

$$\Pr\left\{|\hat{g}_{\mathbf{N}}(\mathbf{a}) - g(\mathbf{a})| > \epsilon\right\} \leq \sum_{l=1}^{L} h_{N_l}\left(\frac{\epsilon}{Lp_l}\middle| a_l\lambda, \nu_l, p_l\right), \tag{20}$$

where $\hat{g}_{\mathbf{N}}(\mathbf{a}) := \sum_{l=1}^{L} p_l \hat{f}_{N_l}(a_l\lambda) + \lambda\sum_{l=1}^{L} p_l a_l$, and $\hat{f}_{N_l}(a_l\lambda)$ is the time average queue length during the interval $[1, Y_{N_l}]$ at queue l, that is, $\hat{f}_{N_l}(a_l\lambda) := \frac{1}{Y_{N_l}}\sum_{t=1}^{Y_{N_l}} Q_l[t]$.

Proof.

$$\begin{aligned}
&\Pr\left\{|\hat{g}_{\mathbf{N}}(\mathbf{a}) - g(\mathbf{a})| > \epsilon\right\} \\
&= \Pr\left\{\left|\sum_{l=1}^{L} p_l \hat{f}_{N_l}(a_l\lambda) - \sum_{l=1}^{L} p_l f_l(a_l\lambda)\right| > \epsilon\right\} \\
&\leq \Pr\left\{\sum_{l=1}^{L} p_l \left|\hat{f}_{N_l}(a_l\lambda) - f_l(a_l\lambda)\right| > \epsilon\right\} \\
&\leq \sum_{l=1}^{L} \Pr\left\{p_l \left|\hat{f}_{N_l}(a_l\lambda) - f_l(a_l\lambda)\right| > \frac{\epsilon}{L}\right\} \\
&\leq \sum_{l=1}^{L} h_{N_l}\left(\frac{\epsilon}{Lp_l}\middle| a_l\lambda, \nu_l, p_l\right),
\end{aligned} \tag{21}$$

where the last inequality follows from Proposition 2. □

Remark: By Proposition 2, we have

$$\lim_{N_l \to \infty} h_{N_l}\left(\frac{\epsilon}{Lp_l}\middle| a_l\lambda, \nu_l, p_l\right) = 0.$$

Given any $\delta > 0$, if we want

$$\sum_{l=1}^{L} h_{N_l}\left(\frac{\epsilon}{Lp_l}\middle| a_l\lambda, \nu_l, p_l\right) < \delta,$$

we can choose N_l such that $h_{N_l}\left(\frac{\epsilon}{Lp_l}\middle| a_l\lambda, \nu_l, p_l\right) < \frac{\delta}{L}$. Thus, we can get the approximation of $g(\mathbf{a})$ at arbitrary accuracy by observing sufficient many failures N_l for each queue l.

4.2. Non-Derivative method

Let $\Omega := \{\mathbf{a} : \sum_{l=1}^{L-1} a_l \leq 1, a_l \geq 0, \forall l = 1, 2, ..., L-1\}$. Note that Ω is an intersection of linearly constraints. In the following proposed algorithm, we need to construct the positive spanning sets $\mathbf{B}$ and $\mathbf{D}(\mathbf{a}_k) \subseteq \mathbf{B}$ at each point $\mathbf{a}_k$ that conforms to Ω, that is, for some $\tau > 0$, if for each $\mathbf{x}$ in the boundary of Ω for which $\|\mathbf{x} - \mathbf{a}_k\| < \tau$, the tangent cone $T_\Omega(\mathbf{x}) := \text{closure}\{\mu(\mathbf{y} - \mathbf{x}) : \mu \geq 0, \mathbf{y} \in \Omega\}$ can be generated by nonnegative linear combination of the columns of $\mathbf{D}(\mathbf{a}_k)$. Paper [14] introduced the method to construct $\mathbf{D}(\mathbf{a}_k)$. For example, if $L = 2$, we can choose $\mathbf{D}(\mathbf{a}_k) \equiv [1, -1]$; if $L = 3$, we can select $\mathbf{D}(\mathbf{a}_k) \equiv [\mathbf{I}, -\mathbf{I}, \mathbf{F}]$, where $\mathbf{I}$ is an 2×2 identity matrix and $\mathbf{F} = [1\ -1; -1\ 1]$. Let N_l^k be the number of failures happening at queue l during the kth iteration. Let $\mathbf{N}^k := (N_l^k)_{l=1}^L$.

Pattern Search (PS) method:

Requirement: $\rho \in (0, 1)$, $\lim_{k\to\infty} \sum_{n=k}^{\infty} \delta_n = 0$ and $\lim_{k\to\infty} \frac{\epsilon_k}{\Delta_k} = 0$, as $\Delta_k \to 0$.

(1) Initialization: choose any $\mathbf{a_0} \in \Omega$ and $\Delta_0 > 0$. Given any $\epsilon_0 > 0$ and $\delta_0 \in (0, 1)$, compute $\mathbf{N}^0$ such that $\Pr\{|\hat{g}_{\mathbf{N}^0}(\mathbf{a_0}) - g(\mathbf{a_0})| > \epsilon_0\} \leq \delta_0$.

(2) Poll step: In the kth iteration, construct $\mathcal{M}_k \triangleq \{\mathbf{a_k} + \Delta_k \mathbf{d} : \mathbf{d} \in \mathbf{D}(\mathbf{a}_k)\}$. Choose $\epsilon_k > 0$ and $\delta_k \in (0, 1)$, and sequentially evaluate the functional value $\hat{g}_{\mathbf{N}^k}(\mathbf{a}')$ for any $\mathbf{a}' \in \mathcal{M}_k$ satisfying $\Pr\{|\hat{g}_{\mathbf{N}^k}(\mathbf{a}') - g(\mathbf{a_k})| > \epsilon_k\} \leq \delta_k$ until some $\mathbf{a}' \in \mathcal{M}_k$ satisfying $\hat{g}_{\mathbf{N}^k}(\mathbf{a}') < \hat{g}_{\mathbf{N}^k}(\mathbf{a_k})$ is obtained, or until all points in $\mathcal{M}_k$ are evaluated.

(3) Step size update: If the poll step produced an improved point, i.e., $\hat{g}(\mathbf{a_{k+1}}) < \hat{g}(\mathbf{a_k})$, then $\Delta_{k+1} = \Delta_k$; Otherwise, $\hat{g}(\mathbf{a_k}) \leq \hat{g}(\mathbf{a_k} + \Delta_k \mathbf{d})$ for all $\mathbf{d} \in \mathbf{D}(\mathbf{a}_k)$, set $\mathbf{a}_{k+1} = \mathbf{a}_k$ and update $\Delta_{k+1} = \rho\Delta_k$. Increase $k \leftarrow k + 1$, and go back to the poll step.

Next, we will establish the convergence property of the PS algorithm.

Lemma 2. *The sequence of step sizes $\{\Delta_k\}_{k=0}^{\infty}$ produced by the PS algorithm satisfy $\lim_{k\to\infty} \Delta_k = 0$, almost surely.*

Proof. It is easy to show that (see [15])

$$\left\{\lim_{k\to\infty} \Delta_k > 0\right\} = \bigcup_{n=1}^{\infty} \bigcup_{m=1}^{\infty} \bigcap_{k=m}^{\infty} \left\{\Delta_k > \frac{1}{n}\right\}. \tag{22}$$

Thus, we have

$$\Pr\left(\lim_{k\to\infty}\Delta_k > 0\right) = \Pr\left(\bigcup_{n=1}^{\infty}\bigcup_{m=1}^{\infty}\bigcap_{k=m}^{\infty}\left\{\Delta_k > \frac{1}{n}\right\}\right). \tag{23}$$

By using the subadditivity property of the probability measure, we have

$$\Pr\left(\bigcup_{n=1}^{\infty}\bigcup_{m=1}^{\infty}\bigcap_{k=m}^{\infty}\left\{\Delta_k > \frac{1}{n}\right\}\right) \leq \sum_{n=1}^{\infty}\Pr\left(\bigcup_{m=1}^{\infty}\bigcap_{k=m}^{\infty}\left\{\Delta_k > \frac{1}{n}\right\}\right). \tag{24}$$

By combining (23) and (24), we have

$$\begin{aligned}\Pr\left(\lim_{k\to\infty}\Delta_k > 0\right) &\leq \sum_{n=1}^{\infty}\Pr\left(\bigcup_{m=1}^{\infty}\bigcap_{k=m}^{\infty}\left\{\Delta_k > \frac{1}{n}\right\}\right)\\ &\overset{(a)}{=} \sum_{n=1}^{\infty}\Pr\left(\lim_{m\to\infty}\bigcap_{k=m}^{\infty}\left\{\Delta_k > \frac{1}{n}\right\}\right) \overset{(b)}{=} \sum_{n=1}^{\infty}\lim_{m\to\infty}\Pr\left(\bigcap_{k=m}^{\infty}\left\{\Delta_k > \frac{1}{n}\right\}\right),\end{aligned} \tag{25}$$

where (a) follows from the fact that $\bigcap_{k=m}^{\infty}\left\{\Delta_k > \frac{1}{n}\right\}, \forall m$, are monotone non-decreasing and the property of the monotone sequence of sets, and (b) follows from the continuity of the probability measure for the monotonic sequences.

Next, let's consider $\Pr\left(\bigcap_{k=m}^{\infty}\left\{\Delta_k > \frac{1}{n}\right\}\right)$. Since Δ_k is non-increasing, if the event $\bigcap_{k=m}^{\infty}\left\{\Delta_k > \frac{1}{n}\right\}$ happens, then there exists a $\bar{k} \geq m$ such that $\Delta_k = \Delta_{\bar{k}}, \forall k \geq \bar{k}$. Thus, after $\bar{k}^{th}$ iteration, the algorithm always evaluates a constant finite number of points. Thus, at least one point belongs to the sequence $\{\mathbf{a}_k\}_{k=0}^{\infty}$ infinitely many times. In addition, since $\Delta_k = \Delta_{\bar{k}}, \forall k \geq \bar{k}$, we have $\epsilon_k(\Delta_k) = \epsilon_{\bar{k}}(\Delta_{\bar{k}}) \triangleq \epsilon_{\bar{k}}, \forall k \geq \bar{k}$. Hence if the event $\bigcap_{k=\bar{k}}^{\infty}\left\{|\hat{g}(\mathbf{a}_k) - g(\mathbf{a}_k)| \leq \epsilon_{\bar{k}}\right\}$ happens, then the sequence $\{\hat{g}(\mathbf{a}_k)\}_{k=\bar{k}}^{\infty}$ cannot be strictly monotone decreasing, which contradicts the constructions of the algorithm. Thus, if the event $\bigcap_{k=\bar{k}}^{\infty}\left\{|\hat{g}(\mathbf{a}_k) - g(\mathbf{a}_k)| \leq \epsilon_{\bar{k}}\right\}$ happens, the event $\bigcap_{k=m}^{\infty}\left\{\Delta_k > \frac{1}{n}\right\}$ won't happen. Thus, we have

$$\Pr\left(\bigcap_{k=m}^{\infty}\left\{\Delta_k > \frac{1}{n}\right\}\right) \leq \Pr\left(\bigcup_{k=m}^{\infty}\left\{|\hat{g}(\mathbf{a}_k) - g(\mathbf{a}_k)| > \epsilon_{\bar{k}}\right\}\right) \leq \sum_{k=m}^{\infty}\Pr\left(|\hat{g}(\mathbf{a}_k) - g(\mathbf{a}_k)| > \epsilon_{\bar{k}}\right) \leq \sum_{k=m}^{\infty}\delta_k. \tag{26}$$

Thus, by taking the limit on the both sides of (26), we have

$$\lim_{m\to\infty}\Pr\left(\bigcap_{k=m}^{\infty}\left\{\Delta_k > \frac{1}{n}\right\}\right) \leq \lim_{m\to\infty}\sum_{k=m}^{\infty}\delta_k = 0. \tag{27}$$

Hence, we have

$$\Pr\left(\lim_{k\to\infty}\Delta_k > 0\right) = 0. \tag{28}$$

By noting that $\Delta_k \geq 0, \forall k$, we have the desired result. □

Next, we will show that the mean queue length is a convex function of the arrival rate, which implies that $g(\mathbf{a})$ is convex and thus is directional differentiable [16].

Proposition 4. *For a single queue with the failure probability p, the mean queue length is a convex function of the arrival rate under general arrival and service processes.*

PROOF. See Appendix D for the proof. □

By Proposition 4, it is easy to show the convexity of $g(\mathbf{a})$ over Ω. Before stating the main convergence result, we need the concept of refining subsequence introduced in [17].

Definition 5. *(**Refining subsequence**) Consider a sequence $\{\mathbf{a}_k\}_{k=0}^{\infty}$ constructed by PS algorithm. We define the subsequence $\{\mathbf{a}_k\}_{k\in\mathbf{K}}$ as the refining subsequence, if $\Delta_{k+1} < \Delta_k$ for all $k \in \mathbf{K}$, and $\Delta_{k+1} = \Delta_k$ for all $k \notin \mathbf{K}$.*

Proposition 5. *Let $\mathbf{a}^*$ be a limit point of a refining subsequence $\{\mathbf{a_k}\}_{k\in\mathbf{K}}$, constructed by PS algorithm. Let $\mathbf{d}$ be any column of positive spanning set $\mathbf{B}$ along which $\hat{g}(\cdot)$ was evaluated for infinitely many iterates in the subsequence $\{a_k\}_{k\in\mathbf{K}}$. Then, we have*

$$\Pr\left\{g'(\mathbf{a}^*;\mathbf{d}) = \limsup_{\mathbf{a}\to\mathbf{a}^*, t\downarrow 0} \frac{g(\mathbf{a}+t\mathbf{d}) - g(\mathbf{a})}{t} \geq 0\right\} = 1. \tag{29}$$

PROOF.

$$\begin{aligned}
&\Pr\left\{0 > g'(\mathbf{a}^*;\mathbf{d}) = \limsup_{\mathbf{a}\to\mathbf{a}^*, t\downarrow 0} \frac{g(\mathbf{a}+t\mathbf{d}) - g(\mathbf{a})}{t}\right\} \\
&\leq \Pr\left\{0 > \limsup_{k\in\mathbf{K}} \frac{g(\mathbf{a_k}+\Delta_k\mathbf{d}) - g(\mathbf{a_k})}{\Delta_k}\right\} \\
&= \Pr\left\{0 > \limsup_{k\in\mathbf{K}} \left(\frac{\hat{g}(\mathbf{a_k}+\Delta_k\mathbf{d}) - \hat{g}(\mathbf{a_k})}{\Delta_k} + \frac{g(\mathbf{a_k}+\Delta_k\mathbf{d}) - \hat{g}(\mathbf{a_k}+\Delta_k\mathbf{d}) + \hat{g}(\mathbf{a_k}) - g(\mathbf{a_k})}{\Delta_k}\right)\right\} \\
&\overset{(a)}{\leq} \Pr\left\{0 > \limsup_{k\in\mathbf{K}} \left(\frac{g(\mathbf{a_k}+\Delta_k\mathbf{d}) - \hat{g}(\mathbf{a_k}+\Delta_k\mathbf{d})}{\Delta_k} + \frac{\hat{g}(\mathbf{a_k}) - g(\mathbf{a_k})}{\Delta_k}\right)\right\},
\end{aligned}$$

where (a) follows from that $\hat{g}(\mathbf{a_k}+\Delta_k\mathbf{d}) \geq \hat{g}(\mathbf{a_k})$, since $\{\mathbf{a}_k\}_{k\in\mathbf{K}}$ is a refining subsequence. Let $\mathcal{F}_k$ be the event that

$$\frac{-2\epsilon_k}{\Delta_k} \leq \frac{g(\mathbf{a_k}+\Delta_k\mathbf{d}) - \hat{g}(\mathbf{a_k}+\Delta_k\mathbf{d}) + \hat{g}(\mathbf{a_k}) - g(\mathbf{a_k})}{\Delta_k}. \tag{30}$$

Then, if $\liminf_{n\to\infty} \mathcal{F}_n$ happens, that is, $\exists n > 0$ such that $\mathcal{F}_k$ happens for all $k \geq n$, then

$$0 = \limsup_{k\in\mathbf{K}} \frac{-2\epsilon_k}{\Delta_k} \leq \limsup_{k\in\mathbf{K}} \frac{g(\mathbf{a_k}+\Delta_k\mathbf{d}) - \hat{g}(\mathbf{a_k}+\Delta_k\mathbf{d}) + \hat{g}(\mathbf{a_k}) - g(\mathbf{a_k})}{\Delta_k}.$$

Thus, we have

$$\left\{0 > \limsup_{k\in\mathbf{K}} \frac{g(\mathbf{a_k}+\Delta_k\mathbf{d}) - \hat{g}(\mathbf{a_k}+\Delta_k\mathbf{d}) + \hat{g}(\mathbf{a_k}) - g(\mathbf{a_k})}{\Delta_k}\right\} \subseteq (\liminf_{k\in\mathbf{K}} \mathcal{F}_k)^c = \limsup_{k\in\mathbf{K}} \mathcal{F}_k^c. \tag{31}$$

Hence, we have

$$\Pr\{0 > g'(\mathbf{a}^*;\mathbf{d})\} \leq \Pr\{\limsup_{k\in\mathbf{K}} \mathcal{F}_k^c\} \leq \Pr\{\lim_{n\in\mathbf{K}} \cup_{k\geq n}\mathcal{F}_k^c\} = \lim_{n\in\mathbf{K}} \Pr\{\cup_{k\geq n}\mathcal{F}_k^c\} \leq \lim_{n\in\mathbf{K}} \sum_{k\geq n} \Pr\{\mathcal{F}_k^c\}. \tag{32}$$

Since

$$\begin{aligned}\Pr\{\mathcal{F}_k^c\} &= \Pr\left\{-2\epsilon_k > g(\mathbf{a_k}+\Delta_k\mathbf{d}) - \hat{g}(\mathbf{a_k}+\Delta_k\mathbf{d}) + \hat{g}(\mathbf{a_k}) - g(\mathbf{a_k})\right\} \\ &\le \Pr\left\{-\epsilon_k > g(\mathbf{a_k}+\Delta_k\mathbf{d}) - \hat{g}(\mathbf{a_k}+\Delta_k\mathbf{d})\right\} + \Pr\left\{-\epsilon_k > \hat{g}(\mathbf{a_k}) - g(\mathbf{a_k})\right\} \\ &\le \Pr\left\{|g(\mathbf{a_k}+\Delta_k\mathbf{d}) - \hat{g}(\mathbf{a_k}+\Delta_k\mathbf{d})| > \epsilon_k\right\} + \Pr\left\{|\hat{g}(\mathbf{a_k}) - g(\mathbf{a_k})| > \epsilon_k\right\} \le 2\delta_k, \end{aligned} \tag{33}$$

we have

$$\Pr\left\{0 > g'(\mathbf{a}^*;\mathbf{d}) = \limsup_{\mathbf{a}\to\mathbf{a}^*, t\downarrow 0} \frac{g(\mathbf{a}+t\mathbf{d}) - g(\mathbf{a})}{t}\right\} \le 2\lim_{n\to\infty}\sum_{k\ge n}\delta_k = 0. \tag{34}$$

Hence, we have the desired result. □

Remark: In fact, this result does not require the convexity of g. Proposition 5 continues to hold if g is locally Lipschitz continuous, which guarantees the existence of its directional derivative (see [18]).

Corollary 1. *If g is strictly differentiable at a limit point $\mathbf{a}^*$ of a refining subsequence, and if the selection of the positive spanning sets $\mathbf{D}(\mathbf{a}_k)$ conforms to Ω for a $\tau > 0$, then $\mathbf{a}^*$ is a KKT point almost surely, that is, $\nabla g(\mathbf{a}^*)^T x \ge 0$ for all $x \in T_\Omega(\mathbf{a}^*)$, and $-\nabla g(\mathbf{a}^*) \in N_\Omega(\mathbf{a}^*)$ hold with probability 1, where $N_\Omega(\mathbf{x}) := \{\mathbf{y} : \forall \mathbf{y} \in T_\Omega(x), \mathbf{y}^T\mathbf{x} \le 0\}$.*

Proof. The proof is similar to the argument in [17]. □

Remarks: 1. Here, we only require that the objective function g is differentiable at the limiting point rather than being continuously differentiable, which is required in [11][12].

2. Even if g is not differentiable at $\mathbf{a}^*$, we still have desirable property that $g'(\mathbf{a}^*;\mathbf{d}) \ge 0$ for all $\mathbf{d} \in \mathbf{B}$ from Proposition 5.

5. Simulations

In this section, we perform numerical simulations to confirm that the proposed PS algorithm indeed can converge to the optimal point. We consider $L = 2$ unreliable queues. We assume that the amount of arrivals and the amount of services follow the Poisson distribution with mean $\lambda = 1$ and $\mu = [3, 3]$. Each queue i ($i = 1$ or 2) fails with probability p_i at each time slot. We consider the symmetric case $\mathbf{p} = [0.2, 0.2]$ and asymmetric case $\mathbf{p} = [0.2, 0.01]$. We take $\rho = 0.8$ in the PS algorithm.

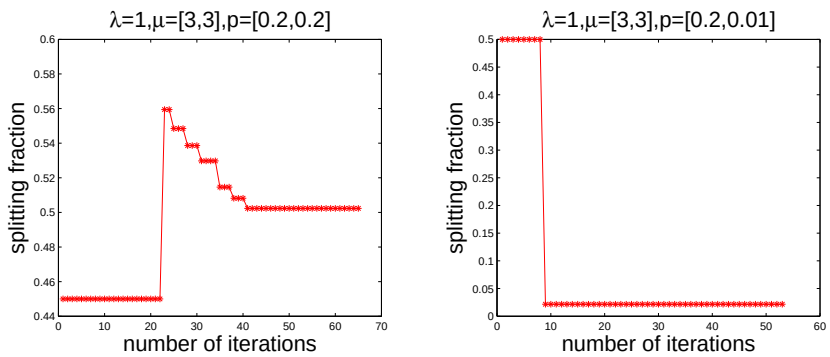

(a) Symmetric case (b) Asymmetric case

Figure 4: Convergence of the PS algorithm

The upper bound in Proposition 3 is too pessimistic, which requires huge N even for achieving small probabilistic error. In this simulation, we heuristically increase N by 100 starting from 10000 at each iteration. In the symmetric case, it is obvious that the optimal splitting fraction for queue 1 is 0.5; while in the asymmetric case, we use the brute-force search to get the optimal splitting fraction for queue 1 is close to 0. From figures 4a and 4b, we can observe that the proposed PS algorithm gradually converges to the optimal point as established in the theoretical analysis, however slowly.

6. Conclusions

In this paper, we investigated the problem of efficient routing for unreliable networks that are prone to probabilistic buffer failures. We first revealed the advantage of using constant splitting rule (CSR) in such a setup over the more traditional choices of Join the Shortest Queue (JSQ) or Randomized Splitting (RS). This motivated us to obtain the optimal splitting fraction that solves the optimization problem with the objective function depending on the mean queue length.

Realizing the difficulty in getting the exact expression for the objective function under general arrival and service processes, we use non-derivative methods to solve this optimization problem by using the time average queue length to approximate the mean queue length. By adaptively controlling the approximation error, we show that the proposed algorithm can almost surely converge to an optimal splitting fraction under mild conditions.

References

[1] J. Tsitsiklis, Optimal Dynamic Routing in an Unreliable Manufacturing System, M.Sc. Thesis, Department of EECS, MIT, 1981.

[2] I. Mitrani, P. Wright, Routing in the presence of breakdowns, Performance Evaluation 20 (1-3) (1994) 151–164.

[3] W. Whitt, Deciding which queue to join: Some counterexamples, Operation Research 34 (1) (1986) 55–62.

[4] L. Tassiulas, A. Ephremides, Dynamic server allocation to parallel queues with randomly varying connectivity, IEEE Transactions on Information Theory 39 (2) (1993) 466–478.

[5] G. Foschini, J. Salz, A basic dynamic routing problem and diffusion, IEEE Transactions on Communications 26 (3) (1978) 320–327.

[6] A. Eryilmaz, R. Srikant, Asymptotically tight steady-state queue length bounds implied by drift conditions, available online at `http://arxiv.org/abs/1104.0327` (2011).

[7] E. Polak, Computational Methods in Optimization: A Unified Approach, Academic Press, 1971.

[8] R. Hooke, T. A. Jeeves, Direct search solution of numerical and statistical problems, Journal of ACM 8 (2) (1961) 212–229.

[9] J. J. Dennis, V. Torczon, Direct search methods on parallel machines, SIAM Journal on Optimization 1 (4) (1991) 448–474.

[10] E. Polak, M. Wetter, Precision control for generalized pattern search algorithms with adaptive precision function evaluations, SIAM Journal on Optimization 16 (3) (2006) 650–669.

[11] M. Trosset, On the use of direct search methods for stochastic optimization, Technica Report, Department of Computational & Applied Mathematics, Rice University, Houston, TX.

[12] S. Kim, D. Zhang, Convergence properties of direct search methods for stochastic optimization, in: Proc. Winter Simulation Conference (WSC), Baltimore, MD, 2010.

[13] A. Shwartz, A. Weiss, Large Deviations For Performance Analysis: QUEUES, Communication and Computing, Chapman and Hall/CRC, 1995.

[14] R. Lewis, V. Torczon, Pattern search methods for linearly constrained minimization, SIAM Journal on Optimization 10 (3) (2000) 917–941.

[15] A. Kolmogorov, S. Fomin, Introductory Real Analysis, Dover Publications, Inc., 1975.

[16] D. Bertsekas, A. Nedic, A. Ozdaglar, Convex Analysis and Optimization, Athena Scientific, Belmont, Mass., 2003.

[17] C. Audet, J. Dennis, Analysis of generalized pattern searches, SIAM Journal on Optimization 13 (3) (2003) 889–903.

[18] F. Clarke, Optimization and Nonsmooth Analysis (Classics in Applied Mathematics), Society for Industrial Mathematics, 1987.

[19] S. Meyn, R. Tweedie, Markov Chains and Stochastic Stability, Springer-Verlag, 1993.

[20] R. Weber, A note on waiting times in single server queues, Operations Research 31 (5) (1983) 950–951.

Appendix A. Basic properties for a single unreliable buffer

In this section, we study some basic properties for a system consisting of a single server and an associated unreliable queue. Since we only consider a single queue, we will omit the subscript in this section. From the queue length evolution (1), it is easy to see that $\{Q[t]\}_{t\geq 0}$ forms a Markov Chain. The following lemma shows that the stationary distribution of the underlying Markov Chain exists.

Lemma 3. *For any non-zero failure probability p, if both second moment of arrivals and services are bounded (i.e., $\mathbb{E}[A^2[t]] < \infty$ and $\mathbb{E}[S^2[t]] < \infty$), then there exist a random variable $\overline{Q}$ with $\mathbb{E}[\overline{Q}] < \infty$ such that*

$$\lim_{t\to\infty} \mathbb{E}[Q[t]] = \mathbb{E}[\overline{Q}]. \tag{A.1}$$

Proof. Choose Lyapunov function $V(Q[t]) := Q^2[t]$. Then,

$$\begin{aligned}
\Delta V &:= \mathbb{E}\left[V(Q[t+1]) - V(Q[t])|Q[t] = Q\right] \\
&\leq \mathbb{E}\left[(Q[t](1-F[t]) + A[t](1-F[t]) - S[t])^2 - Q^2[t]|Q[t] = Q\right] \\
&\leq Q^2\mathbb{E}[(1-F[t])^2] + 2Q\mathbb{E}[A[t](1-F[t])^2 - S[t](1-F[t])] + \mathbb{E}\left[(A[t](1-F[t]) - S[t])^2\right] - Q^2 \\
&= -pQ^2 + 2Q(1-p)(\lambda-\mu) + B \\
&= -pQ\left(Q - \frac{2(1-p)(\lambda-\mu)}{p}\right) + B
\end{aligned} \tag{A.2}$$

where $B := \mathbb{E}\left[(A[t](1-F[t]) - S[t])^2\right] \leq (1-p)\mathbb{E}[A^2[t]] + \mathbb{E}[S^2[t]] < \infty$. Thus, if

$$Q > \max\left\{\frac{2(1-p)(\lambda-\mu)}{p}, 0\right\} + 1 =: C, \tag{A.3}$$

then,

$$\Delta V \leq -pQ + B. \tag{A.4}$$

By using Theorem 14.0.1 in [19], we have the desire result. □

The existence of stationary distribution implies that the underlying Markov Chain is ergodic and thus, by the Ergodic Theorem [19], we have

$$\limsup_{T\to\infty} \frac{1}{T}\sum_{t=1}^{T} Q[t] = \mathbb{E}[\overline{Q}], a.s. \tag{A.5}$$

Next, we would like to determine the rate at which the time average queue length converges to the mean queue length. Normally, it is hard to characterize the convergence rate of the Ergodic Theorem. However, in our setup, we can estimate the convergence rate by regarding it as a renewal reward process. When a failure happens, all the data in the queue will be dropped and thus we can take each failure as a renewal. Let X_n be the length of nth renewal. Note that X_n is a geometric random variable with parameter p. Let Y_n be the time at which n^{th} renewal occurs and $Y_0 = 0$. Let R_n be the total summation of queue length between the $(n-1)^{th}$ and n^{th} renewals, that is, $R_n = \sum_{t=Y_{n-1}+1}^{Y_n} Q[t]$. Let N be the number of renewals since $Y_0 = 0$. The next Lemma shows that the first and second moment of R_n are bounded.

Lemma 4. *The first and second moment of the earned reward R_n between the $(n-1)^{th}$ and n^{th} renewals are bounded, i.e.,*

$$\mathbb{E}[R_n] \leq \frac{\lambda(1-p)}{p^2}$$
$$\mathbb{E}[R_n^2] \leq \frac{(\nu-2\lambda^2)p^3 + (10\lambda^2 - 3\nu)p^2 + (2\nu - 14\lambda^2)p + 6\lambda^2}{p^4}$$

Proof. Consider a new system with the same failure probability where there is the same arrival as the original system and no departure happens. Let $Q'[t]$ be the queue length at slot t in the new system. It is obvious that for every sample path, we have

$$R_n = \sum_{t=Y_{n-1}+1}^{Y_n} Q[t] \leq \sum_{t=Y_{n-1}+1}^{Y_n} Q'[t]. \tag{A.6}$$

Thus, we have $\mathbb{E}[R_n] \leq \mathbb{E}[\sum_{t=Y_{n-1}+1}^{Y_n} Q'[t]]$ and $\mathbb{E}[R_n^2] \leq \mathbb{E}\left[\left(\sum_{t=Y_{n-1}+1}^{Y_n} Q'[t]\right)^2\right]$. Next, let's first consider the term $\mathbb{E}[\sum_{t=Y_{n-1}+1}^{Y_n} Q'[t]]$.

$$\mathbb{E}\left[\sum_{t=Y_{n-1}+1}^{Y_n} Q'[t]\right] \overset{(a)}{=} \mathbb{E}\left[\sum_{t=1}^{X_n} Q'[t]\right] \overset{(b)}{=} \mathbb{E}\left[\sum_{t=1}^{X_n-1} Q'[t]\right] \overset{(c)}{=} \mathbb{E}\left[\sum_{t=1}^{X_n-1} (X_n - 1 - t)A[t-1]\right] \overset{(d)}{=} \mathbb{E}\left[\sum_{t=1}^{X_n-1} tA[t]\right], \tag{A.7}$$

where (a) follows from the fact that the reward during the first renewal has the same distribution as that during the nth renewal; (b) follows that queue length becomes zero when a renewal occurs; (c) follows the evolution of the queue length $Q'[t]$; (d) follows the fact that the arrivals are i.i.d. over time. Since

$$\mathbb{E}\left[\sum_{t=1}^{X_n-1} tA[t]|X_n = X\right] = \lambda \sum_{t=1}^{X-1} t = \frac{\lambda}{2}(X^2 - X), \tag{A.8}$$

we have

$$\mathbb{E}\left[\sum_{t=Y_{n-1}+1}^{Y_n} Q'[t]\right] = \frac{\lambda}{2}(\mathbb{E}[X^2] - \mathbb{E}[X]). \tag{A.9}$$

By following the same argument for deriving (A.7), we have

$$\mathbb{E}\left[\left(\sum_{t=Y_{n-1}+1}^{Y_n} Q'[t]\right)^2\right] = \mathbb{E}\left[\left(\sum_{t=1}^{X_n-1} tA[t]\right)^2\right]. \tag{A.10}$$

Since

$$\begin{aligned}
&\mathbb{E}\left[\left(\sum_{t=1}^{X_n-1} tA[t]\right)^2 |X_n = X\right] \\
&= \sum_{t=1}^{X-1} t^2\mathbb{E}[A[t]^2] + 2\sum_{i=1}^{X-2}\sum_{j=i+1}^{X-1} ij\mathbb{E}[A[i]]\mathbb{E}[A[j]] \\
&= \frac{\nu}{6}(2X^3 - 3X^2 + X) + \frac{\lambda^2}{12}(3X^4 - 10X^3 + 9X^2 - 2X) \\
&= \frac{\lambda^2}{4}X^4 + \left(\frac{\nu}{3} - \frac{5\lambda^2}{6}\right)X^3 + \left(\frac{3\lambda^2}{4} - \frac{\nu}{2}\right)X^2 + \left(\frac{\nu}{6} - \frac{\lambda^2}{6}\right)X,
\end{aligned} \tag{A.11}$$

we have

$$\mathbb{E}\left[\left(\sum_{t=S_{n-1}+1}^{S_n} Q'[t]\right)^2\right] = \frac{\lambda^2}{4}\mathbb{E}[X^4] + \left(\frac{\nu}{3} - \frac{5\lambda^2}{6}\right)\mathbb{E}[X^3] + \left(\frac{3\lambda^2}{4} - \frac{\nu}{2}\right)\mathbb{E}[X^2] + \left(\frac{\nu}{6} - \frac{\lambda^2}{6}\right)\mathbb{E}[X]. \tag{A.12}$$

Since X is a geometric random variable with parameter p, we have

$$\begin{aligned}
&\mathbb{E}[X] = \frac{1}{p}, \mathbb{E}[X^2] = \frac{2-p}{p^2} \\
&\mathbb{E}[X^3] = \frac{6 - 6p + p^2}{p^3}, \mathbb{E}[X^4] = \frac{24 - 36p + 14p^2 - p^3}{p^4}.
\end{aligned} \tag{A.13}$$

By substituting (A.13) into (A.9) and (A.12), we have

$$\mathbb{E}\left[\sum_{t=S_{n-1}+1}^{S_n} Q'[t]\right] = \frac{\lambda(1-p)}{p^2} \tag{A.14}$$

$$\mathbb{E}\left[\left(\sum_{t=S_{n-1}+1}^{S_n} Q'[t]\right)^2\right] = \frac{(\nu-2\lambda^2)p^3+(10\lambda^2-3\nu)p^2+(2\nu-14\lambda^2)p+6\lambda^2}{p^4} \tag{A.15}$$

Hence, we have the desire result. □

Since $\mathbb{E}[X_n] < \infty$ and $\mathbb{E}[R_n] < \infty$, according to the strong law of large numbers, we have

$$\lim_{N\to\infty}\frac{1}{Y_N}\sum_{n=1}^{N} R_n = \lim_{N\to\infty}\frac{N}{Y_N}\frac{1}{N}\sum_{n=1}^{N} R_n = \lim_{N\to\infty}\frac{1}{\frac{1}{N}\sum_{n=1}^{N} X_n}\frac{1}{N}\sum_{n=1}^{N} R_n = \frac{\mathbb{E}[R_n]}{\mathbb{E}[X_n]}, a.s. \tag{A.16}$$

On the other hand,

$$\lim_{N\to\infty}\frac{1}{Y_N}\sum_{n=1}^{N} R_n = \lim_{N\to\infty}\frac{1}{Y_N}\sum_{n=1}^{N}\sum_{t=Y_{n-1}+1}^{Y_n} Q[t] = \lim_{N\to\infty}\frac{1}{Y_N}\sum_{t=1}^{Y_N} Q[t] = \mathbb{E}[\overline{Q}]\ a.s., \tag{A.17}$$

where the last step follows from equation (A.5). Since $\mathbb{E}[\overline{Q}] < \infty$, we have $\mathbb{E}[\overline{Q}] = \frac{\mathbb{E}[R_n]}{\mathbb{E}[X_n]}$. Note that it is easier to investigate the convergence rate of (A.16) than that of (A.17).

Appendix B. Proof for Lemma 1

Proof. Recall that $\mathbb{E}[\overline{Q}] = \frac{\mathbb{E}[R_n]}{\mathbb{E}[X_n]}$. Let's consider the term $\mathbb{E}[R_n]$.

$$\mathbb{E}[R_n] = \mathbb{E}\left[\sum_{t=Y_{n-1}+1}^{Y_n} Q[t]\right] \overset{(a)}{=} \mathbb{E}\left[\sum_{t=1}^{X_n} Q[t]\right] \overset{(b)}{=} \mathbb{E}\left[\sum_{t=1}^{X_n-1} Q[t]\right],$$

where (a) follows from the fact that the reward during the first renewal has the same distribution as that during the nth renewal; (b) follows the fact that queue length becomes zero when a renewal occurs. Since there is no failure during the renewal interval, the queue length evolution for the constant arrivals and constant services is as follows:

$$Q[t] = (Q[t-1]+\lambda-\mu)^+, t = 1, 2, ..., X_n - 1, \tag{B.1}$$

where $Q[0] = 0$. Thus, we have

$$Q[t] = t(\lambda-\mu)^+, \forall t = 1, 2, ..., X_n - 1. \tag{B.2}$$

Hence, we have

$$\mathbb{E}[R_n] = \mathbb{E}\left[\sum_{t=1}^{X_n-1} t(\lambda-\mu)^+\right] = \frac{1}{2}(\lambda-\mu)^+\mathbb{E}[X_n^2 - X_n].$$

Since X_n is a geometric random variable with parameter p, we have $\mathbb{E}[X_n] = \frac{1}{p}$ and $\mathbb{E}[X_n^2] = \frac{2-p}{p^2}$. Thus, we have

$$\mathbb{E}[R_n] = \frac{1-p}{p^2}(\lambda - \mu)^+. \tag{B.3}$$

Thus, we have

$$\mathbb{E}[\overline{Q}] = \frac{\mathbb{E}[R_n]}{\mathbb{E}[X_n]} = \frac{1-p}{p}(\lambda - \mu)^+. \tag{B.4}$$

Appendix C. Proof for Proposition 2

To prove Proposition 2, we need the following two lemmas.

Lemma 5.

$$\Pr\left\{\left|\frac{N}{Y_N} - \frac{1}{\mathbb{E}[X]}\right| > \epsilon\right\} \leq h_1(\epsilon), \tag{C.1}$$

where

$$h_{1,N}(\epsilon|p) := \begin{cases} \frac{(1-p)(p+\epsilon)^2}{N\epsilon^2}, \textit{if } \epsilon \geq p \\ \frac{(1-p)(p+\epsilon)^2}{N\epsilon^2} + \frac{(1-p)(p-\epsilon)^2}{N\epsilon^2}, \textit{if } \epsilon < p \end{cases} \tag{C.2}$$

.

Proof.

$$\Pr\left\{\left|\frac{N}{Y_N} - \frac{1}{\mathbb{E}[X]}\right| > \epsilon\right\} \leq \underbrace{\Pr\left\{\frac{N}{Y_N} > \frac{1}{\mathbb{E}[X]} + \epsilon\right\}}_{=:P_1} + \underbrace{\Pr\left\{\frac{N}{Y_N} < \frac{1}{\mathbb{E}[X]} - \epsilon\right\}}_{=:P_2} \tag{C.3}$$

For P_1, we have

$$\begin{aligned}
P_1 &= \Pr\left\{\frac{Y_N}{N} < \frac{\mathbb{E}[X]}{1+\epsilon\mathbb{E}[X]}\right\} = \Pr\left\{\frac{1}{N}\sum_{i=1}^N X_i < \frac{\mathbb{E}[X]}{1+\epsilon\mathbb{E}[X]}\right\} \\
&= \Pr\left\{\frac{1}{N}\sum_{i=1}^N X_i - \mathbb{E}[X] < \frac{-\epsilon\mathbb{E}[X]^2}{1+\epsilon\mathbb{E}[X]}\right\} \leq \Pr\left\{\left|\frac{1}{N}\sum_{i=1}^N X_i - \mathbb{E}[X]\right| > \frac{\epsilon\mathbb{E}[X]^2}{1+\epsilon\mathbb{E}[X]}\right\} \\
&\leq \left(\frac{1+\epsilon\mathbb{E}[X]}{\epsilon\mathbb{E}[X]^2}\right)^2 \mathbb{E}\left[\left(\frac{1}{N}\sum_{i=1}^N X_i - \mathbb{E}[X]\right)^2\right] \text{(By Chebyshev's inequality)} \\
&= \left(\frac{1+\epsilon\mathbb{E}[X]}{\epsilon\mathbb{E}[X]^2}\right)^2 \frac{1}{N^2}\mathbb{E}\left[\left(\sum_{i=1}^N (X_i - \mathbb{E}[X])\right)^2\right] \\
&= \left(\frac{1+\epsilon\mathbb{E}[X]}{\epsilon\mathbb{E}[X]^2}\right)^2 \frac{1}{N^2}\sum_{i=1}^N \mathrm{Var}(X_i) = \left(\frac{1+\epsilon\mathbb{E}[X]}{\epsilon\mathbb{E}[X]^2}\right)^2 \frac{\mathrm{Var}(X)}{N}
\end{aligned} \tag{C.4}$$

Since X is a geometric random variable with parameter p, $\mathbb{E}[X] = \frac{1}{p}$ and $\mathrm{Var}(X) = \frac{1-p}{p^2}$. Thus, we have

$$P_1 \leq \frac{(1-p)(p+\epsilon)^2}{N\epsilon^2}. \tag{C.5}$$

For P_2, if $\epsilon \geq \frac{1}{\mathbb{E}[X]} = p$, $P_2 = 0$. If $\epsilon < p$, then we have

$$\begin{aligned}
P_2 &= \Pr\left\{\frac{Y_N}{N} > \frac{\mathbb{E}[X]}{1-\epsilon\mathbb{E}[X]}\right\} \\
&= \Pr\left\{\frac{1}{N}\sum_{i=1}^{N} X_i - \mathbb{E}[X] > \frac{\epsilon\mathbb{E}[X]^2}{1-\epsilon\mathbb{E}[X]}\right\} \\
&\leq \Pr\left\{\left|\frac{1}{N}\sum_{i=1}^{N} X_i - \mathbb{E}[X]\right| > \frac{\epsilon\mathbb{E}[X]^2}{1-\epsilon\mathbb{E}[X]}\right\} \\
&\overset{(a)}{\leq} \left(\frac{1-\epsilon\mathbb{E}[X]}{\epsilon\mathbb{E}[X]^2}\right)^2 \frac{\mathrm{Var}(X)}{N} \\
&= \frac{(1-p)(p-\epsilon)^2}{N\epsilon^2}
\end{aligned} \tag{C.6}$$

where (a) follows the same line of argument as deriving (C.4). By substituting (C.5) and (C.6) into (C.3), we have the desire result. □

Lemma 6.

$$\Pr\left\{\left|\frac{1}{N}\sum_{n=1}^{N} R_n - \mathbb{E}[R_n]\right| > \epsilon\right\} \leq h_2(\epsilon) \tag{C.7}$$

where

$$h_{2,N}(\epsilon|\lambda,\nu,p) := \frac{(\nu-2\lambda^2)p^3 + (10\lambda^2-3\nu)p^2 + (2\nu-14\lambda^2)p + 6\lambda^2}{N\epsilon^2p^4}$$

.

Proof.

$$\begin{aligned}
&\Pr\left\{\left|\frac{1}{N}\sum_{n=1}^{N} R_n - \mathbb{E}[R_n]\right| > \epsilon\right\} \\
&\leq \frac{1}{\epsilon^2}\mathbb{E}\left[\left(\frac{1}{N}\sum_{n=1}^{N} R_n - \mathbb{E}[R_n]\right)^2\right] \\
&\overset{(a)}{=} \frac{1}{\epsilon^2}\frac{\mathrm{Var}(R_n)}{N} \\
&\leq \frac{1}{\epsilon^2}\frac{\mathbb{E}[R_n^2]}{N} \\
&\leq \frac{(\nu-2\lambda^2)p^3 + (10\lambda^2-3\nu)p^2 + (2\nu-14\lambda^2)p + 6\lambda^2}{N\epsilon^2p^4}
\end{aligned} \tag{C.8}$$

where (a) follows the same argument as deriving (C.4). □

Proof of Proposition 2:

$$
\begin{aligned}
&\Pr\left\{\left|\frac{1}{Y_N}\sum_{t=1}^{Y_N} Q[t] - \mathbb{E}[\overline{Q}]\right| > \epsilon\right\} \\
&= \Pr\left\{\left|\frac{1}{Y_N}\sum_{n=1}^{N} R_n - \frac{\mathbb{E}[R_n]}{\mathbb{E}[X_n]}\right| > \epsilon\right\} \\
&= \Pr\left\{\left|\frac{N}{Y_N}\frac{1}{N}\sum_{n=1}^{N} R_n - \frac{\mathbb{E}[R_n]}{\mathbb{E}[X_n]}\right| > \epsilon\right\} \\
&= \Pr\left\{\left|\frac{N}{Y_N}\frac{1}{N}\sum_{n=1}^{N} R_n - \frac{N}{Y_N}\mathbb{E}[R_n] + \frac{N}{Y_N}\mathbb{E}[R_n] - \frac{\mathbb{E}[R_n]}{\mathbb{E}[X_n]}\right| > \epsilon\right\} \\
&\le \Pr\left\{\frac{N}{Y_N}\left|\frac{1}{N}\sum_{n=1}^{N} R_n - \mathbb{E}[R_n]\right| + \mathbb{E}[R_n]\left|\frac{N}{Y_N} - \frac{1}{\mathbb{E}[X_n]}\right| > \epsilon\right\} \\
&\le \underbrace{\Pr\left\{\frac{N}{Y_N}\left|\frac{1}{N}\sum_{n=1}^{N} R_n - \mathbb{E}[R_n]\right| > \frac{\epsilon}{2}\right\}}_{:=P_1} + \underbrace{\Pr\left\{\mathbb{E}[R_n]\left|\frac{N}{Y_N} - \frac{1}{\mathbb{E}[X_n]}\right| > \frac{\epsilon}{2}\right\}}_{:=P_2}
\end{aligned}
\tag{C.9}
$$

Next, let's consider P_1.

$$
\begin{aligned}
P_1 &= \Pr\left\{\left|\frac{N}{Y_N} - \frac{1}{\mathbb{E}[X_n]} + \frac{1}{\mathbb{E}[X_n]}\right|\left|\frac{1}{N}\sum_{n=1}^{N} R_n - \mathbb{E}[R_n]\right| > \frac{\epsilon}{2}\right\} \\
&\le \Pr\left\{\left|\frac{N}{Y_N} - \frac{1}{\mathbb{E}[X_n]}\right|\left|\frac{1}{N}\sum_{n=1}^{N} R_n - \mathbb{E}[R_n]\right| + \frac{1}{\mathbb{E}[X_n]}\left|\frac{1}{N}\sum_{n=1}^{N} R_n - \mathbb{E}[R_n]\right| > \frac{\epsilon}{2}\right\} \\
&\le \Pr\left\{\frac{1}{\mathbb{E}[X_n]}\left|\frac{1}{N}\sum_{n=1}^{N} R_n - \mathbb{E}[R_n]\right| > \frac{\epsilon}{4}\right\} + \Pr\left\{\left|\frac{N}{Y_N} - \frac{1}{\mathbb{E}[X_n]}\right|\left|\frac{1}{N}\sum_{n=1}^{N} R_n - \mathbb{E}[R_n]\right| > \frac{\epsilon}{4}\right\} \\
&\le \Pr\left\{\left|\frac{1}{N}\sum_{n=1}^{N} R_n - \mathbb{E}[R_n]\right| > \frac{\epsilon}{4}\mathbb{E}[X_n] = \frac{\epsilon}{4p}\right\} \\
&+ \Pr\left\{\left|\frac{1}{N}\sum_{n=1}^{N} R_n - \mathbb{E}[R_n]\right| > \frac{\sqrt{\epsilon}}{2}\right\} + \Pr\left\{\left|\frac{N}{Y_N} - \frac{1}{\mathbb{E}[X_n]}\right| > \frac{\sqrt{\epsilon}}{2}\right\}
\end{aligned}
\tag{C.10}
$$

Next, let's consider P_2. By Lemma 4, we have $\mathbb{E}[R_n] \le \frac{\lambda(1-p)}{p^2}$. Thus, we have

$$
P_2 \le \Pr\left\{\frac{\lambda(1-p)}{p^2}\left|\frac{N}{Y_N} - \frac{1}{\mathbb{E}[X_n]}\right| > \frac{\epsilon}{2}\right\} = \Pr\left\{\left|\frac{N}{Y_N} - \frac{1}{\mathbb{E}[X_n]}\right| > \frac{\epsilon p^2}{2\lambda(1-p)}\right\} \tag{C.11}
$$

Thus, we have

$$\begin{aligned}
&\Pr\left\{\left|\frac{1}{Y_N}\sum_{t=1}^{Y_N} Q[t] - \mathbb{E}[\overline{Q}]\right| > \epsilon\right\} \\
&\leq \Pr\left\{\left|\frac{1}{N}\sum_{n=1}^{N} R_n - \mathbb{E}[R_n]\right| > \frac{\epsilon}{4p}\right\} + \Pr\left\{\left|\frac{1}{N}\sum_{n=1}^{N} R_n - \mathbb{E}[R_n]\right| > \frac{\sqrt{\epsilon}}{2}\right\} \\
&+ \Pr\left\{\left|\frac{N}{Y_N} - \frac{1}{\mathbb{E}[X_n]}\right| > \frac{\sqrt{\epsilon}}{2}\right\} + \Pr\left\{\left|\frac{N}{Y_N} - \frac{1}{\mathbb{E}[X_n]}\right| > \frac{\epsilon p^2}{2\lambda(1-p)}\right\} \qquad \text{(C.12)}
\end{aligned}$$

By Lemma 5 and , we have

$$\Pr\left\{\left|\frac{R(t)}{t} - \frac{\mathbb{E}[R_n]}{\mathbb{E}[X_n]}\right| > \epsilon\right\} \leq h_{1,N}\left(\frac{\sqrt{\epsilon}}{2}\middle|p\right) + h_{1,N}\left(\frac{\epsilon p^2}{2\lambda(1-p)}\middle|p\right) + h_{2,N}\left(\frac{\epsilon}{4p}\middle|\lambda,\nu,p\right) + h_{2,N}\left(\frac{\sqrt{\epsilon}}{2}\middle|\lambda,\nu,p\right)$$

Appendix D. Proof for Proposition 4

Proof. The proof is similar to [20] and is by induction on $Q[t]$ using the following identities.

$$\begin{aligned}
Q[t+1] =& ((Q[t] + \lambda x_t)(1 - z_t) - \mu y_t)^+ \\
=& \begin{cases} \max\{0, Q[t] + \lambda x_t - \mu y_t\} & \text{, if } z_t = 0; \\ 0 & \text{, if } z_t = 1. \end{cases} \qquad \text{(D.1)}
\end{aligned}$$

If we assume that $Q[t]$ is convex in λ, we can see that $Q[t+1]$ is also convex in λ. Since the theorem is true for any values of x_t, y_t and z_t, it is also true when these are realizations of random variables. Thus, the mean queue length is a convex function of the arrival rate. □

Bin Li received his B.S. degree in Electronic Engineering and M.S. degree in Communication Engineering, both from Xiamen University, China, in 2005 and 2008, respectively. Between 2008 and 2009, he was with the University of Texas at Arlington. He is currently pursuing the Ph.D. degree in the Department of Electrical and Computer Engineering at The Ohio State University.

His research interests include wireless communication and networks, optimal network control, distributed algorithms, and optimization theory. He received the Presidential Fellowship at The Ohio State University in 2013.

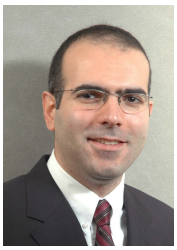

Atilla Eryilmaz (S '00-M '06) received his B.S. degree in Electrical and Electronics Engineering from Boğaziçi University, Istanbul, in 1999, and the M.S. and Ph.D. degrees in Electrical and Computer Engineering from the University of Illinois at Urbana-Champaign in 2001 and 2005, respectively. Between 2005 and 2007, he worked as a Postdoctoral Associate at the Laboratory for Information and Decision Systems at the Massachusetts Institute of Technology. He is currently an Associate Professor of Electrical and Computer Engineering at The Ohio State University.

Dr. Eryilmaz's research interests lie in the modeling, design and analysis of complex networked systems. His specific focus areas include design and analysis for communication networks, optimal

control of stochastic networks, optimization theory, distributed algorithms, pricing in smart power and data markets, proactive resource allocation in data networks, and targeting in social networks. He received the NSF-CAREER and the Lumley Research Awards in 2010.